THERMODYNAMICS REVISION

Systems,

Properties

Perfect gases

Liquid/Vapours

Zeroth law

First Law

Processes

Systems

A SYSTEM is a part of the universe defined by a BOUNDARY.
A boundary may an actual physical boundary, or it may be 'imaginary'.
The boundary may be fixed (called a 'control volume') or it may be allowed to move.
It is important to know what is inside the boundary and what is not.
What is outside the boundary is often simply called the system's 'surroundings'.

Examples of Systems and Boundaries

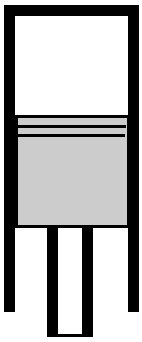

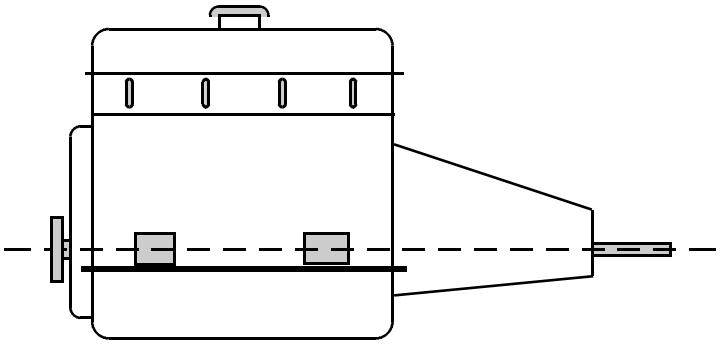

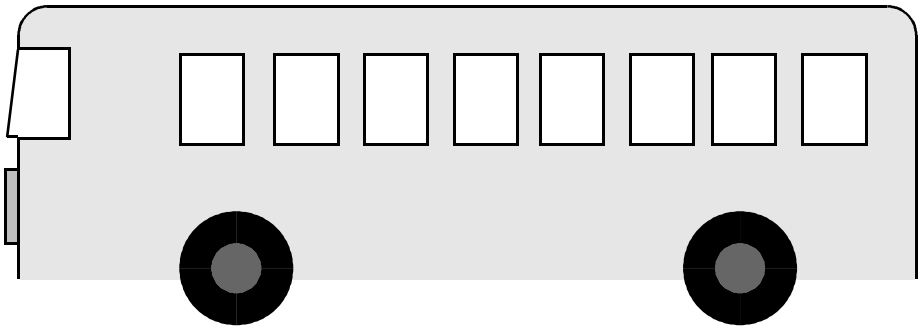

All Buses

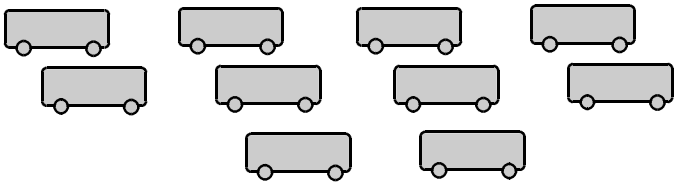

A System may be CLOSED or OPEN.

A CLOSED system is one where **mass** does not cross the boundary.
NB energy in the form of heat and/or work can enter or leave the system by means of heat transfer or work transfer.

An OPEN system is one where **mass** may enter or leave the system.
The OPEN systems we will study will be those where mass enters and leaves at the same rate. i.e. the system is not accumulating mass, or being depleted of mass.
Such a system is said to be a ‘steady flow’ system.

It is important to be able to identify whether a system is OPEN or CLOSED

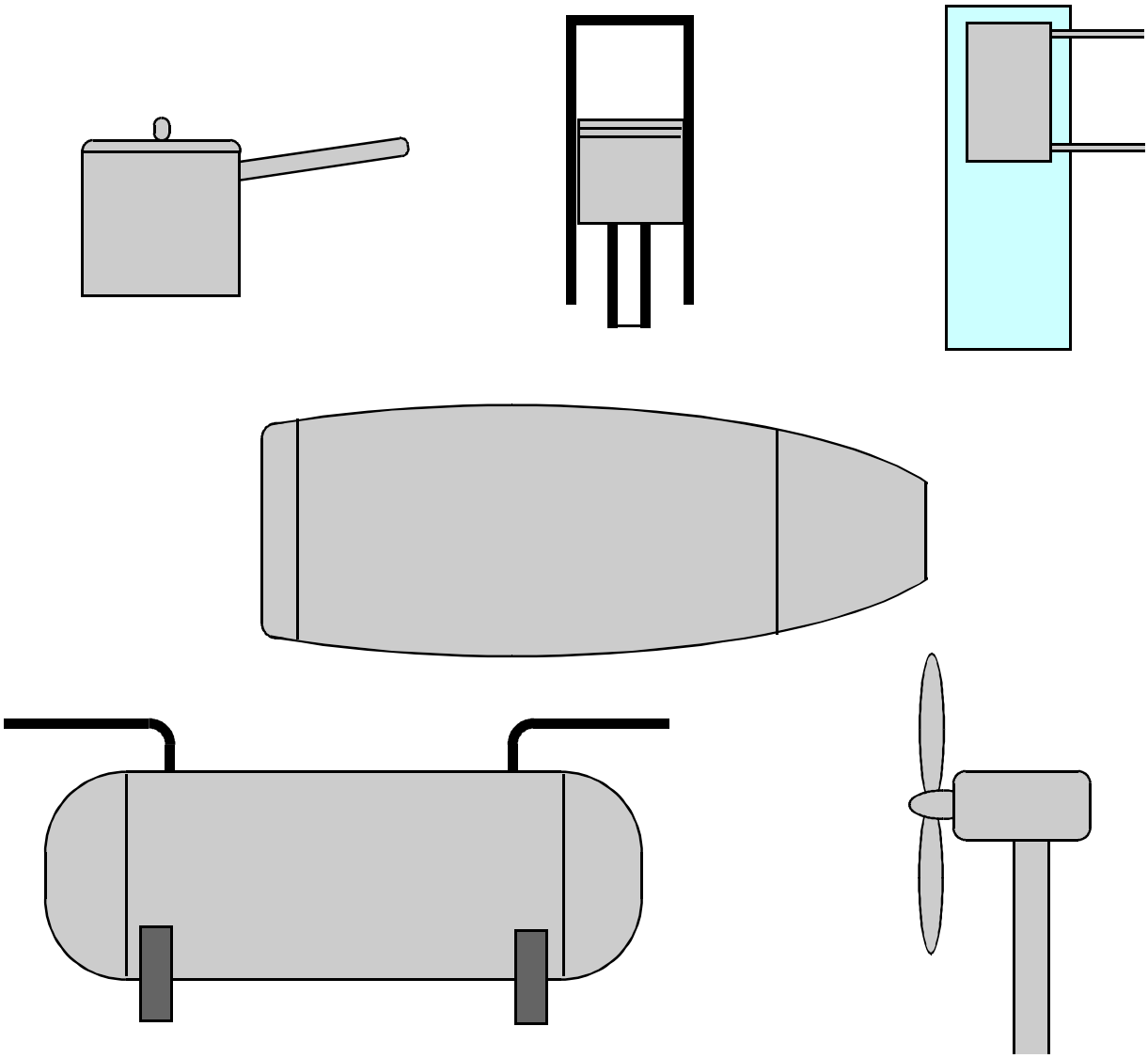

Properties

A system normally contains a substance (often a gas or a liquid). The state of a system is defined by the properties of the substance.

A property is any characteristic of a substance which may be measured and expressed as a quantity.

Properties may be intrinsic or extrinsic.
Intrinsic properties do not depend on the quantity of substance involved, whereas extrinsic properties increase in proportion to the mass of substance. For this reason extrinsic properties are often expressed ‘per specified quantity of substance’ - usually per unit mass (kg).
The property becomes a ‘specific property’.

Substances have many properties - but fortunately it is not necessary to specify them all in order to define the state of a system.

The two property rule:
The state of a substance may be defined by any two independent properties, and all other properties may be found if two independent properties are known.

Two properties are independent of each other if one can be varied without varying the other (although properties other than the two independent ones may vary).

Examples of Properties:

Property	Intrinsic	Extrinsic	symbol	specific property	Units
temperature	X		T		K
pressure	X		p		Pa (N/m²)
internal energy		X	U	u	J/kg
volume		X	V	v	m³/kg
mass			m		kg
dynamic viscosity	X		μ		Ns/m²
velocity	X		v,c,or u		m/s
entropy		X	S	s	J/kgK
enthalpy		X	H	h	J/kg
dielectric constant	X		ε		-
thermal conductivity	X		λ		W/mK

Perfect Gases

The air that we breathe is a mixture of approximately 78% Nitrogen, 21% Oxygen and 1% Argon.

There are many gases - but with all gases, if they are compressed and cooled sufficiently, they will become liquid. At atmospheric pressure Nitrogen liquifies at -196°C and Oxygen liquifies at -183°C.
Gases like Hydrogen and Helium have to be cooled to close to the absolute zero of temperature before they will liquify.

The air we breathe is therefore a vapourised liquid at a temperature well above its boiling temperature - it is, in fact, a superheated vapour.

It is possible to imagine a gas that would never liquify no matter how much it is cooled or compressed - such a gas is called a perfect, or ideal, gas. It is found that a real gas (or mixture of gases) behaves reasonably closely to such an ideal gas provided its temperature stays well above its boiling point for its pressure.

Avogadro discovered that if the quantity of gas is measured by counting the number of molecules (rather than using its mass) then all gases behave in the same way... in particular that certain properties are related to one another as expressed by the UNIVERSAL GAS LAW.

$$\boxed{pV = n\bar{R}T}$$

p is pressure in kN/m² (or kPa)
V is volume in m³
n is the number of molecules measured in kmol
$\bar{R}$ is the Universal Gas Constant (8.3145 kJ/kmol K)
T is the temperature in Kelvin

Different gas molecules have different masses, and we can find this information by looking up their molar mass. (Haywood tables page 2).

e.g oxygen has a molar mass of 32 kg/kmol;
carbon dioxide : 44 kg/kmol.

For any specific gas we can find its Specific Gas Constant by dividing the universal gas constant by its molar mass. This is also given in the above reference.
The universal gas equation then becomes:

$$\boxed{pV = mRT}$$

m is the mass of gas in kg
R is the Specific Gas Constant (in kJ/kg K)

Liquids and Vapours

For a perfect gas the properties *p,V,m* and *T* are related by a simple equation.
For a liquid on its own, a liquid/vapour mixture, or a vapour close to the temperature at which it forms from the liquid, no such simple equation exists.

In order to know how the properties are related we literally have to measure them, and plot them one against another on property charts. We may plot any property as a function of any other two independent properties to effectively obtain a contour plot.
Such information is also presented in tables. (Haywood's).

Then, if we need property information - with a knowledge of any two (independent) properties we may look up any other.

The independent properties we use are chosen for convenience, and we use different properties for different applications or to more clearly show different processes.

e.g.
with refrigeration systems: pressure & enthalpy are used;
for steam turbines: temperature & entropy or
enthalpy & entropy,
for many perfect gas cycles: pressure & volume is used.

Zeroth Law of Thermodynamics

The Zeroth Law states that if two bodies are in thermal equilibrium with a third body they are in thermal equilibrium with each other.

To put it more simply - if we measure the temperature of one body (with a thermometer) and (using the same thermometer) find it to be the same as a second body, the two bodies will not exchange heat with each other i.e. they are in thermal equilbrium with each other.

The Zeroth Law is thus an affirmation of temperature - which can best be thought of as a ‘level’ of hotness (or coldness).

If temperature is a measure of hotness or coldness, what is heat?

Heat (transfer) is what occurs when two bodies at different temperatures are brought into thermal contact with each other.

Heat is a form of energy which may transferred across a boundary into or out of a system.
A finite temperature difference is required to achieve a finite heat transfer rate.
If the temperature difference is infinitesmal, the heat transfer is ‘reversible’, (and the heat transfer rate is also infinitesmal!)

First Law of Thermodynamics

The First Law of Thermodynamics states that for any system there exists a property (called energy) that is conserved and may be transferred into or out of the system by heat or work interactions.

It follows that if heat (Q) or work (W) is transferred **into** a closed system its energy level will increase by the amount of work done or heat transferred.

If we designate the property 'energy' by symbol U then:

$$\boxed{\mathbf{Q + W = \Delta U}}$$

This is known as the non-flow energy equation (closed system).

Note that work and heat transfer into a system is defined as positive.
It follows that work and heat transfer out of a system is negative.

Caution: in older text books work transfer out of a system was defined as positive, which means the non-flow energy equation is written as $Q - W = \Delta U$.

If we have an <u>open system</u>, with mass continuously entering and leaving it - three other forms of energy enter or leave by virtue of the mass entering or leaving:
they are:

kinetic energy $\frac{1}{2}mv^2$

potential energy mgz

the energy required to ‘force’ mass into (and out of) the system against the system’s (and surroundings’) pressure.

$$pV$$

since $r = \frac{m}{V}$ we can write this as

$$\frac{mp}{r}$$

Therefore for mass (m) entering or leaving we can write:

$$Q + W = \Delta(\tfrac{1}{2}mv^2 + mgz + \frac{mp}{r} + U)$$

or

$$Q + W = m\,\Delta(\tfrac{1}{2}v^2 + gz + \frac{p}{r} + u)$$

Since all substances have a pressure and temperature the last two terms are usually combined into a single property called enthaply (*h*).
If we divide both sides by time to obtain the heat, work and mass transfer <u>rates</u> we obtain:

$$\boxed{\dot{Q} + \dot{W} = \dot{m}\,\Delta(\tfrac{1}{2}v^2 + gz + h)}$$

This is known as the steady flow energy equation (open system).

Processes

A process occurs when a system's state (as measured by its properties) changes for any reason. Processes may be reversible, or actual (irreversible). In this context the word 'reversible' has a special meaning. A reversible process is one which is wholly theoretical, but can be imagined as one which occurs without incurring friction, turbulence, leakage or anything which causes unrecoverable energy losses.
All of the process considered below are reversible - we will deal with actual processes later.

Processes may be constrained to occur :

at constant temperature : isothermal
at constant pressure : isobaric
at constant volume : isochoric
at constant enthalpy : isenthalpic
at constant entropy : isentropic
with no heat transfer to the surroundings : adiabatic

Work transfer to/from a perfect gas

When work is transferred to a gas (often referred to as a compression process) its volume decreases, its pressure increases, and its temperature may increase or remain the same depending on whether we allow heat transfer or not.

[With work transfer from a gas (an expansion process) the reverse is true]

We often ilustrate such processes on a pressure/volume graph.

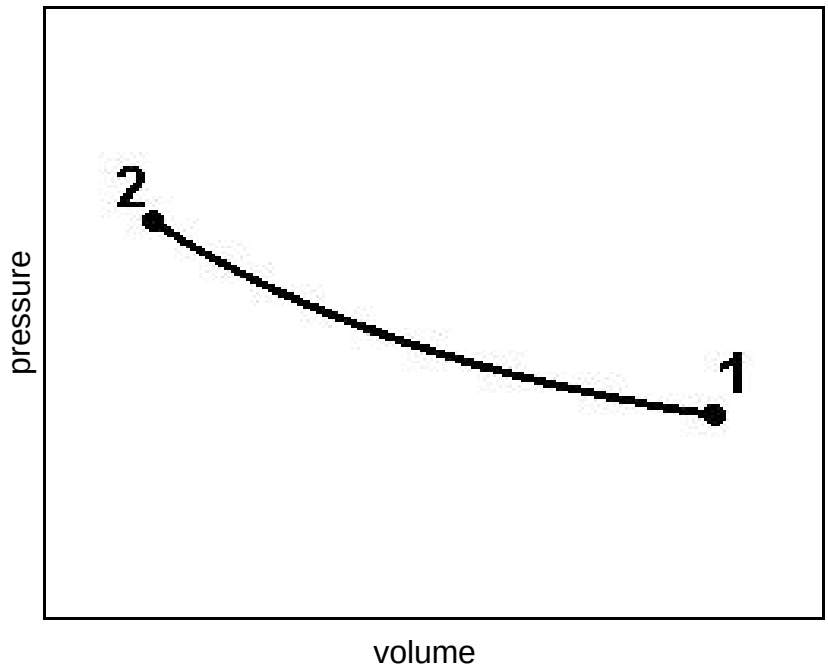

If the heat transfer (out) exactly equals the work transfer (in) there is no net energy transfer and the compression occurs without the temperature rising (an isothermal process). Under these conditions the pressure and volume are related by the perfect gas equation.

$$pV = mRT$$

or

$$pV = constant$$

If there is <u>no</u> heat transfer (an adiabatic process) the temperature rises because the work transfer increases the internal energy. In practice, this may be closely achieved either by carrying out the process very rapidly - giving no time for heat transfer to occur, or ensuring the system is very well insulated.

It is found that during a reversible adiabatic work transfer process the pressure and volume are related by:

$$pV^{\gamma} = constant$$

γ is known as the adiabatic index and is a characteristic of the gas - it may be looked up in tables.

For any work transfer process the work transfer is given by:

$$\boxed{W = -\int_{V_1}^{V_2} p\,dV}$$

the area under the p-V curve

It follows that if we know the relationship between the pressure and volume we can find the work transfer:

It can be shown that where $pV = constant$

$$W = p_1 V_1 \ln\left(\frac{V_1}{V_2}\right)$$

and where: $pV^{\gamma} = constant$

$$W = \frac{p_2 V_2 - p_1 V_1}{g - 1}$$

Heat transfer to/from a Gas

Heat can be transferred to (often referred to as a heating process) or from (a cooling process) a gas in many ways but two important constraints are heat transfer at constant volume (isochoric heat transfer) and heat transfer at constant pressure (isobaric heat transfer).

If the <u>volume remains constant</u> there can be no work transfer

$$(W = 0)$$

therefore the only effect of the heat transfer is to raise the internal energy level.

$$Q = \Delta U$$

For a perfect gas the internal energy is dependent ONLY on temperature, so we can write:

$$\boxed{\Delta U = m\, Cv\, \Delta T}$$

<u>Irrespective of how the temperature change may occur, this will always be true</u>.

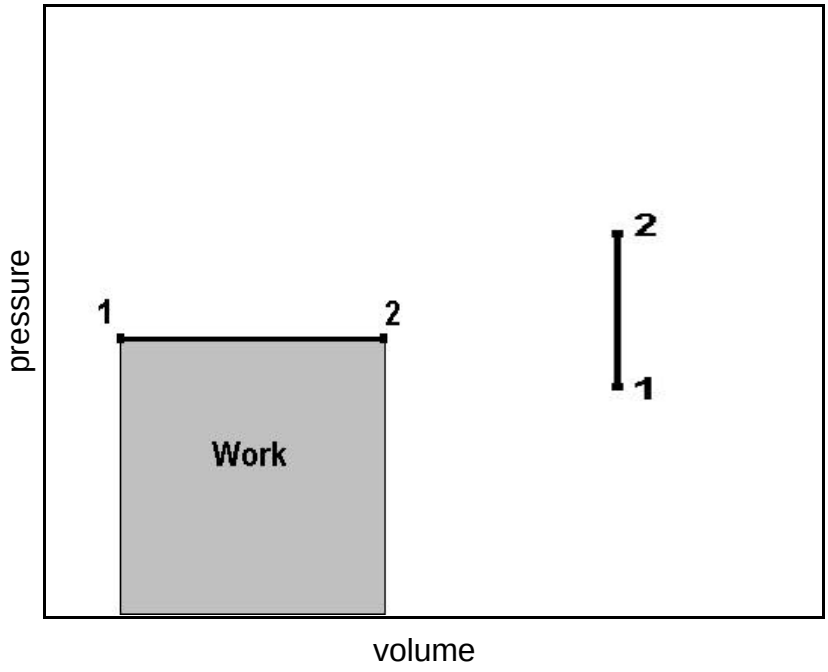

If the <u>pressure remains constant</u> the gas must expand as the temperature rises.

$$Q + W = \Delta U$$

or $$Q = \Delta U - W$$

but $\Delta U = m\,Cv\,\Delta T$ and $W = p\,\Delta V$

However, from the perfect gas equation we know that:

$$pV = mRT$$

therefore $$p\Delta V = m\,R\,\Delta T$$

so $$Q = mCv\,\Delta T + mR\,\Delta T$$

$$= m\,(Cv+R)\Delta T$$

We define $Cp = Cv + R$

So for a constant pressure heat transfer process:

$$\boxed{Q = m\,Cp\,\Delta T}$$