Scale 1 : 1

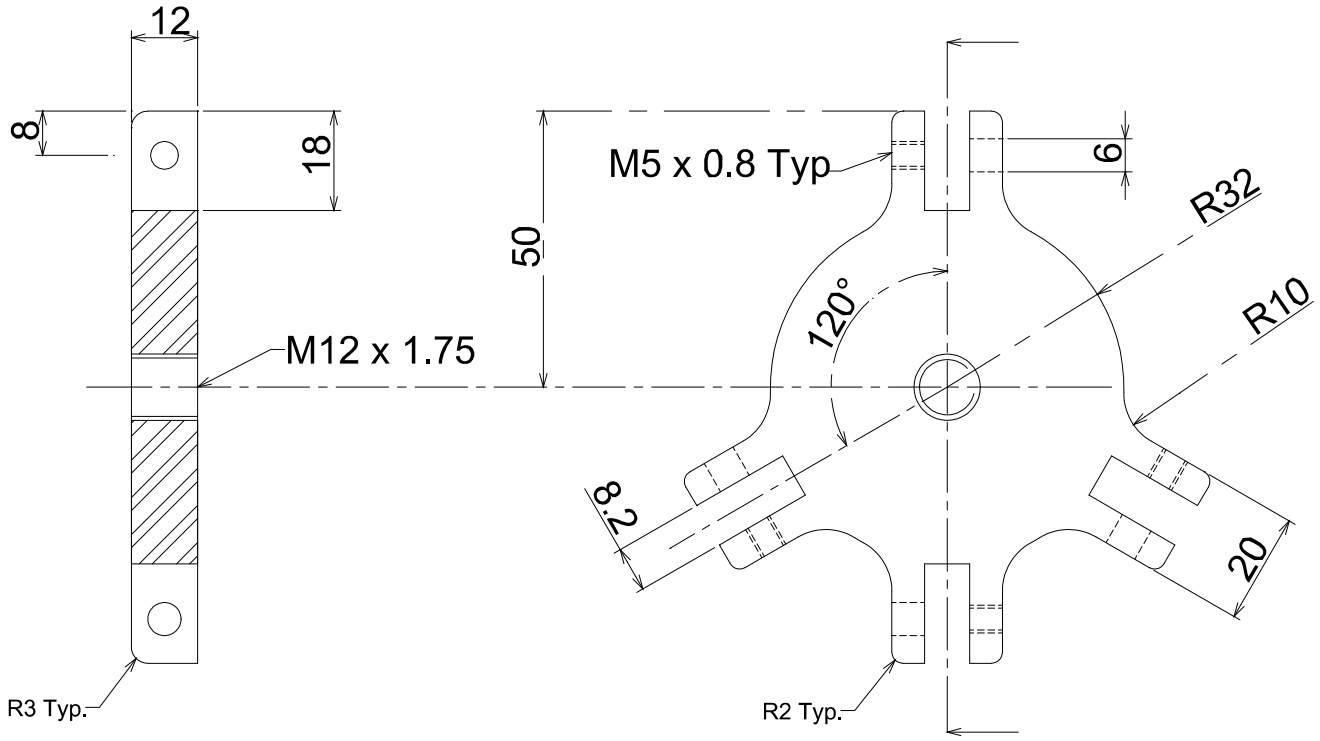

Remove all sharp edges.

University of Plymouth	Part: Body
	All dimensions in mm
	Tolerance +/- 0.5mm
Manufacturing and Fabrication Techniques	Material : BDMS 220M07 BS970
Faculty of Technology	Drawn by R. Crocker Date 20/08/04